LCR EMBEDDED SYSTEMS, INC.®

# Rugged Shipboard Shock-Isolated Chassis for Bulkhead Mount

## *Universal Platform for Multiple Shipboard Operations, Innovative Shock Isolation System*

**LCR Embedded Systems' Shock-Isolated Chassis is designed for direct bulkhead mounting** and provides shipboard applications with a platform that can withstand extreme shock and vibration. It has passed the Deck Simulator Shock Machine (DSSM) test thanks to its innovative shock isolation system, designed and produced by LCR Embedded Systems, and is designed to be used on multiple naval platforms and deck levels.

- Exceptional shock and vibration performance
- Broad weight range for isolation, isolators can be customized for various payloads
- Universal platform can support multiple naval applications

## *Backplane and Card Cage*

VME, VPX, or CompactPCI 6Ux160mm, 8 Slots with RTMs
Card cage attenuated below 30G, IEEE 1101.10 compliant

(2) Double-width CompactPCI power supplies (not part of slot count)

## *Power*

Input 230 or 110 VAC, 440Hz, MIL-STD-1399

Backplane/card cage power isolated from fan power

## *Thermal*

Forced air, front bottom to rear top
(2) Blower fans, 49 CFM each

7-13 CFM/slot
400-500 LFM per power supply slot

## *Interface*

I/O as needed

## *Physical*

Dimensions: 12U x 19" x 22.11"
76 lb unloaded weight, isolators can be customized for loaded weight

Construction: Aluminum frame, Dip-brazed IAW AWS C3.7M/C3.7 Class C, Heat-treat to T6
Finish: Chem Film per MIL-DTL-5541 Type I, Class 3 Gold

## *Environmental*

Shock: MIL-STD-901D at 14Hz (tested)
Vibration: MIL-STD-167-1A, Type I (tested)
EMI: Welded, gasketed, honeycomb air intake/exhaust, MIL-STD-461

Op/St Temperature: 0 to 50 C/-40 to 70 C
Op/St Humidity: 0-95% noncondensing

LCR Embedded Systems • www.lcrembeddedsystems.com
9 South Forrest Ave. #100 Norristown, PA 19401 • (800) 747-5972 • sales@lcrembedded.com

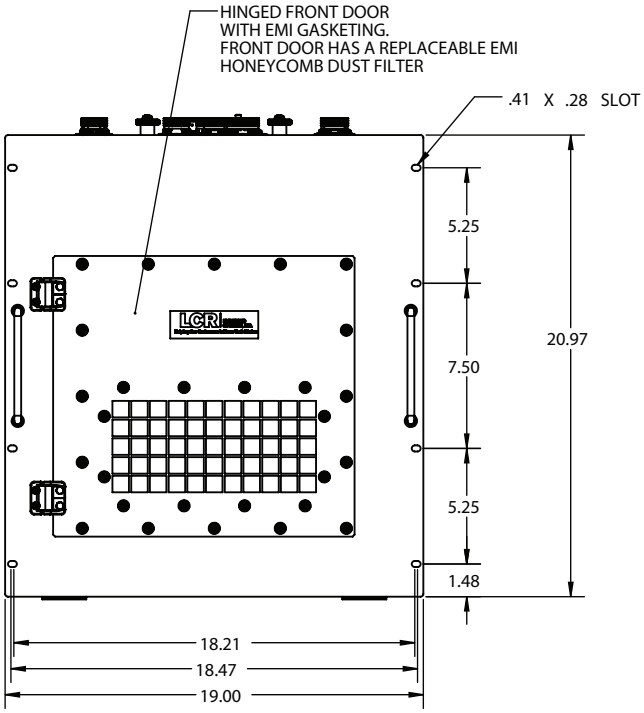


FRONT VIEW

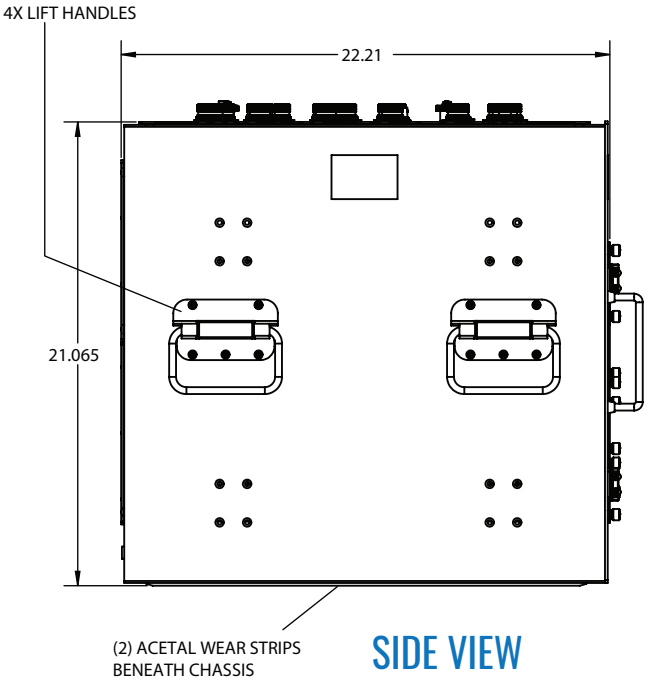


SIDE VIEW

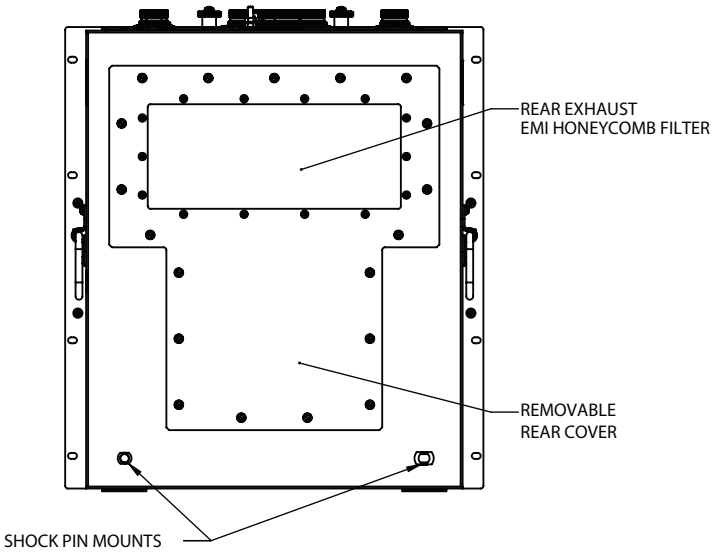


REAR VIEW

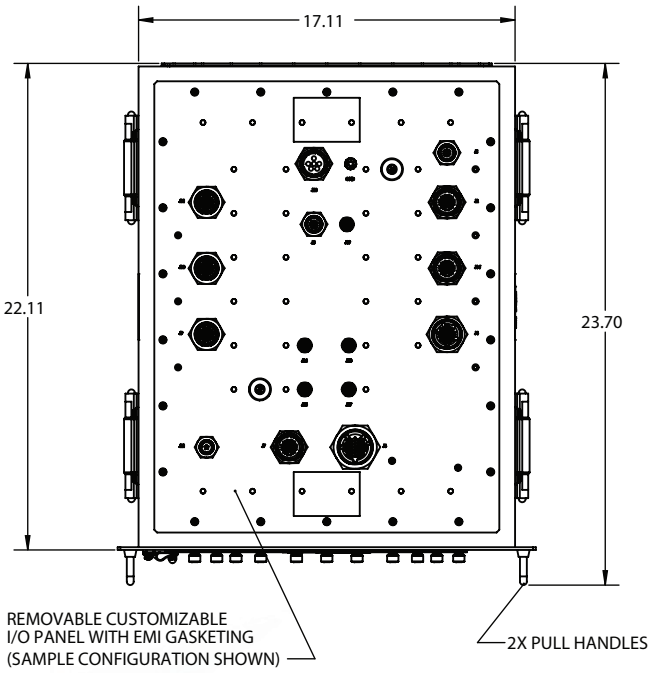


TOP VIEW

(Shock isolation can be customized for variable payloads.)